Océane

J2722-GO

4+	12	2,8m	1 = 10,12m 2 = 7,14m 3 = 3,2m

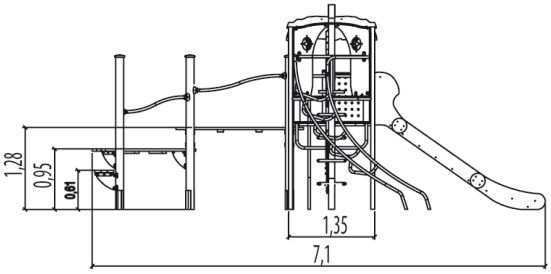

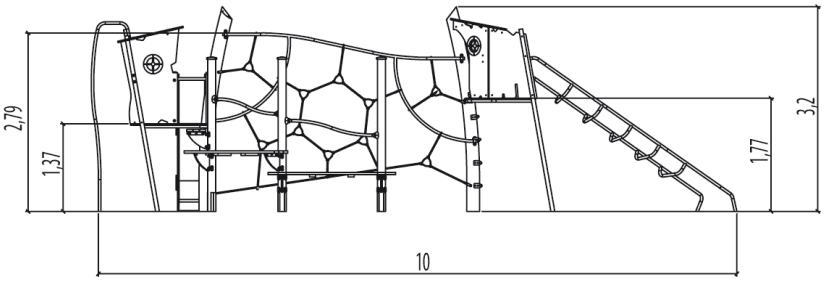

Play value

sliding	climbing	getting across	meeting / role play
x3	x1	x1	x2

Technical information

J2722-GO

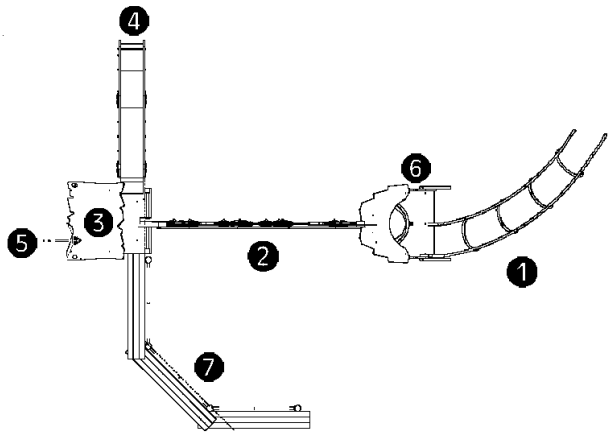

Installation of equipment

Impact area =

Impact area

Free space

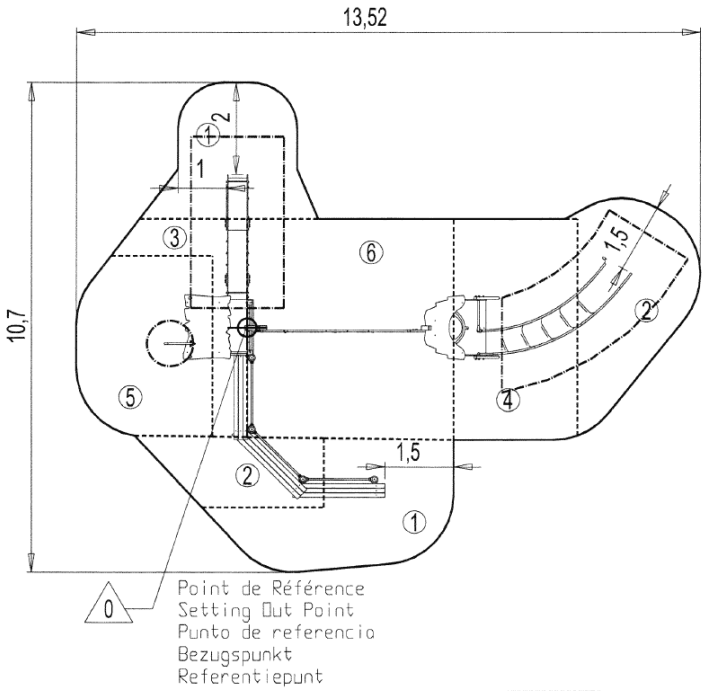

1	1m	18m²
2	1,3m	15m²
3	1,37m	5m²
4	1,77m	13m²
5	2m	11m²
6	2,8m	22m²

2 | 22h45 | 0.6m³ | 84m² | 691kg | 33kg

EN 1176

Proludic

2013-07-15